APx511

HEARING INSTRUMENT ANALYZER

Installation Instructions,
Specifications and
Getting Started Guide

B Series

An Axiometrix Solutions Brand

APx511 B Series hearing instrument analyzer

Installation Instructions and Specifications

B Series APx511

June 2026

An Axiometrix Solutions Brand

Copyright © 2011–2026 Audio Precision, Inc.
All rights reserved.
Printed in the United States of America.

No part of this manual may be reproduced or transmitted in any form or by any means, electronic or mechanical, including photocopying, recording, or by any information storage and retrieval system, without permission in writing from the publisher.

Audio Precision, AP, and APx are trademarks of Audio Precision, Inc. Windows™ is a trademark of Microsoft Corporation. Dolby © Digital is a trademark of Dolby Laboratories. DTS © Digital Surround is trademark of DTS, Inc.

The Bluetooth® word mark and logos are registered trademarks owned by the Bluetooth SIG, Inc. and any use of such marks by Audio Precision is under license. Other trademarks and trade names are those of their respective owners.

MPEG-4 AAC-LC audio technology is licensed by Fraunhofer IIS (https://www.iis.fraunhofer.de/de/ff/amm.html).

HDMI, High-Definition Multimedia Interface, and the HDMI Port Design Logo are registered trademarks of HDMI Licensing Administrator, Inc.

Qualcomm® aptX™, aptX™ HD, and aptX™ Low Latency audio codecs are products of Qualcomm Technologies International, Ltd. Qualcomm is a trademark of Qualcomm Incorporated, registered in the United States and other countries, used with permission. aptX is a trademark of Qualcomm Technologies International, Ltd., registered in the United States and other countries, used with permission.

Audio Precision
9290SW Nimbus Ave
Beaverton, Oregon 97008
503-627-0832
800-231-7350
audioprecision.com

An Axiometrix Solutions Brand

8211.0363.004

XXVI0624134227

Documentation and Support

This booklet contains safety information, installation instructions and full specifications for the Audio Precision APx511 B Series Hearing Instrument Analyzer.

The APx500 User's Manual

The APx511 Getting Started Guide is included in the APx511 Hearing Instrument Analyzer PDF (this document). Additional Configuration information for the APx511 B Series Hearing Instrument Analyzer is available from the embedded Help installed with the APx500 measurement software, in the APx500 User's Manual PDF on the APx500 Application USB and on the Web at audioprecision.com.

audioprecision.com

Visit the Audio Precision Web site at audioprecision.com for APx support information. APx resources are available at audioprecision.com. You can also contact our Technical Support staff at techsupport@audioprecision.com, or by telephoning 503-627-0832 ext. 4, or 800-231-7350 ext. 4 (toll free in the U.S.A.).

Table of Contents

Safety . . . 9
Safety Information . . . 9
Safety Symbols . . . 10
Disclaimer . . . 11
Sécurité . . . 13
Consignes de sécurité . . . 13
Symboles de sécurité . . . 14
Avis de non-responsabilité . . . 15
Seguridad . . . 17
Información de seguridad . . . 17
Símbolos de seguridad . . . 18
Exención de responsabilidad . . . 19
Installation . . . 21
Software . . . 21
Setting up the hardware . . . 24

Installation (Fr) 29
Logiciel 29
Configurer l'appareil 32
Instalación 37
Software 37
APx511 B Series Hearing Instrument Analyzer Specifications 45
Getting Started Guide 53
Overview 53
Software control 53
Front Panel Indicators 54
Rear Panel Connections 54
Basic Test configuration 57
Accessories 57
APxHia 58
Using the APxHITest API 64
Running Self Test 72

Safety

Safety Information

Do NOT service or repair this equipment unless properly qualified. Servicing should be performed only by a qualified technician or an authorized Audio Precision distributor.

Do NOT defeat the safety ground connection. This equipment is designed to operate only with an approved three-conductor power cord and safety grounding. Loss of the protective grounding connection can result in electrical shock hazard from the accessible conductive surfaces of this equipment.

Do NOT exceed mains voltage ratings. This equipment is designed to operate only from a 50–60 Hz ac mains power source at 100–240 Vac nominal voltage. The mains supply voltage is not to exceed ±10 % of nominal (90–264 Vac).

For continued fire hazard protection, fuses should be replaced ONLY with the exact value and type indicated on the rear panel of the instrument and discussed on page page 27 of this booklet.

The International Electrotechnical Commission (IEC 1010-1) requires that measuring circuit terminals used for voltage or current measurement be marked to indicate their Measurement Category. The Measurement Category is based on the amplitude of transient or impulse voltage that can be expected from the AC power distribution network. This product is classified as Measurement Category I, abbreviated “CAT I”. This product should not be used within Categories II, III, or IV. The APx511 measurement terminals are intended to be used for the measurement of audio signals only.

Do NOT substitute parts or make any modifications without the written approval of Audio Precision. Doing so may create safety hazards. Using this product in a man-

ner not specified by Audio Precision can result in a safety hazard.

This product is for indoor use—Installation Category II, Measurement Category I, pollution degree 2.

To clean the enclosure of this product, use a soft cloth or brush to remove accumulated dust. A mild detergent may be used to remove remaining dirt or stains. Do not use strong or abrasive cleaners. Wipe all surfaces with a damp cloth.

This unit is supplied with four feet on the bottom surface and four feet on the right side surface. The unit should only be operated while resting on the bottom surface feet. The feet on the right side are provided for convenience and stability when transporting the unit. DO NOT operate the unit while it is sitting on the side feet.

Safety Symbols

The following symbols may be marked on the panels or covers of equipment or modules, and are used in this manual:

WARNING!—This symbol alerts you to a potentially hazardous condition, such as the presence of dangerous voltage that could pose a risk of electrical shock. Refer to the accompanying Warning Label or Tag, and exercise extreme caution.

ATTENTION!—This symbol alerts you to important operating considerations or a potential operating condition that could damage equipment. If you see this marked on equipment, refer to the Operator's Manual or User's Manual for precautionary instructions.

FUNCTIONAL EARTH TERMINAL—A terminal marked with this symbol is electrically connected to a reference point of a measuring circuit or output and is intended to be earthed for any functional purpose other than safety.

PROTECTIVE EARTH TERMINAL—A terminal marked with this symbol is bonded to conductive parts of the instrument and is intended to be connected to an external protective earthing system.

Disclaimer

Audio Precision cautions against using their products in a manner not specified by the manufacturer. To do otherwise may void any warranties, damage equipment, or pose a safety risk to personnel.

Sécurité

Consignes de sécurité

Ne procédez PAS à l'entretien ou à la réparation de cet équipement à moins d'être dûment qualifié(e) pour le faire. L'entretien devrait être effectué uniquement par un technicien qualifié ou un distributeur Audio Precision agréé.

Ne PAS dérouter le branchement de la mise à la terre de sécurité. Cet équipement est conçu pour être utilisé uniquement avec un cordon d'alimentation approuvé avec connecteur à trois conducteurs et mise à la terre de sécurité. La perte de connexion à la mise à la terre protectrice peut entraîner un risque de choc électrique à partir des surfaces conductrices accessibles de cet équipement.

Ne PAS dépasser la tension de réseau nominale. Cet équipement est conçu pour fonctionner uniquement à partir d'une source d'alimentation réseau de 50–60 Hz CA, à une tension nominale de 100–240 V CA. La tension d'alimentation du réseau ne doit pas dépasser ±10 % de la tension nominale (90–264 V CA).

Pour obtenir en permanence la protection contre les risques d'incendie, les fusibles doivent être remplacés UNIQUEMENT par des fusibles de même valeur et type, comme indiqué sur le panneau arrière de l'instrument et précisé à la page page 21 de ce livret.

La International Electrotechnical Commission (la Commission électrotechnique internationale) (CEI 1010-1) exige que les bornes des circuits de mesure utilisées pour la mesure de la tension ou du courant identifient leur catégorie de mesure. La catégorie de mesure se base sur l'amplitude de la tension transitoire ou de la tension d'impulsion à laquelle on peut s'attendre d'un réseau de distribution d'alimentation électrique CA. Ce produit est classé dans la catégorie de mesure I, selon l'abréviation « CAT I ». Ce produit ne devrait pas être utilisé dans les

catégories II, III ou IV. Ces bornes sont destinées à la mesure des signaux audio seulement.

Ne PAS remplacer de pièces ou effectuer de modifications sans l'approbation écrite d'Audio Precision. Si c'est le cas, il pourrait y avoir des risques pour la sécurité. Utiliser ce produit d'une manière non précisée par Audio Precision peut entraîner un risque pour la sécurité.

Ce produit est destiné à une utilisation à l'intérieur-Catégorie d'installation II, Catégorie de mesure I, degré de pollution 2.

Pour nettoyer le boîtier de ce produit, utiliser un chiffon doux ou une brosse douce permettant d'éliminer la saleté accumulée. Un détergent doux peut être utilisé pour éliminer la saleté ou les taches. Ne pas utiliser de produits nettoyants forts ou abrasifs. Essuyer toutes les surfaces à l'aide d'un chiffon humide.

Cette unité est fournie avec quatre pattes sur le dessous et quatre pattes sur le côté droit. L'unité doit être utilisée uniquement lorsqu'elle repose sur les pattes du dessous. Les pattes sur le côté droit sont installées pour plus de commodité et de stabilité lors du transport. NE PAS utiliser l'unité lorsqu'elle repose sur les pattes du côté

Symboles de sécurité

Les symboles suivants peuvent être présents sur les panneaux ou les couvercles de l'équipement ou des modules, et sont utilisés dans le présent manuel:

AVERTISSEMENT!—Ce symbole vous informe d'une situation potentiellement dangereuse, par exemple, la présence d'une tension dangereuse qui pourrait présenter un risque de choc électrique. Consultez l'autocollant ou l'étiquette d'avertissement qui l'accompagne, et faites preuve d'une grande prudence.

ATTENTION!—Ce symbole vous informe d'importantes considérations liées au fonctionnement ou d'une condition d'utilisation potentielle qui pourrait endommager l'équipement. Si vous voyez ce symbole sur l'équipement, consultez le manuel de l'opérateur ou le manuel de l'utilisateur pour connaître les instructions préventives.

BORNE DE TERRE FONCTIONNELLE— Les bornes identifiées à l'aide de ce symbole sont reliées électrique-

ment à un point de référence d'un circuit ou d'une sortie de mesure et doivent être raccordées à la terre (mise à la terre) pour toute fonction utilitaire autre que la sécurité.

BORNE DE TERRE DE PROTECTION—Les bornes identifiées à l'aide de ce symbole sont liées à des pièces conductrices de l'instrument et elles doivent être raccordées à un système protecteur de mise à la terre externe.

Avis de non-responsabilité

Audio Precision déconseille fortement l'utilisation de ses produits d'une manière non spécifiée par le fabricant. Une telle utilisation pourrait annuler toute garantie, endommager l'équipement ou présenter un risque de sécurité pour le personnel.

Seguridad

Información de seguridad

NO proporcione servicio o reparación a este equipo a menos que esté debidamente calificado. El trabajo de servicio deberá ser efectuado solamente por un técnico calificado o un distribuidor autorizado de Audio Precision.

NO modifique la conexión de seguridad a tierra. Este equipo está diseñado para operar solamente con una extensión aprobada de tres conductores puestos a tierra de seguridad. La pérdida de conexión de protección a tierra puede dar como resultado un peligro de descarga eléctrica al tocar las superficies conductoras accesibles de este equipo.

NO exceder las clasificaciones de la tensión de red eléctrica. Este equipo está diseñado para operar solamente de una fuente de suministro eléctrico de 50–60 Hz de corriente alterna a una tensión nominal de 100–240 VCA. La fuente de suministro de voltaje no debe exceder del ±10 % del nominal (90–264 VCA).

Para protección continua contra riesgo de incendio, los fusibles deberán reemplazarse SOLAMENTE con fusibles de valor y tipo exactos indicados en el panel posterior del instrumento y que se explica en la página page 25 de este folleto.

International Electrotechnical Commission [La Comisión Electrotécnica Internacional] (IEC 1010-1) requiere que los terminales del circuito de medición que se utilizan solamente para medición de voltaje o corriente se marquen para indicar la categoría de medición. La categoría de medición se basa en la amplitud del voltaje transitorio o de impulso que se puede esperar de la red de distribución de voltaje de CA. Este producto se clasifica como Categoría de Medición I, abreviado como “CAT I”.

Este producto no deberá usarse dentro de las categorías II, III, o IV. Los terminales de medición de entrada están concebidos para usarse solamente para la medición de señales de audio.

NO reemplace partes ni haga modificaciones sin la aprobación por escrito de Audio Precision. Hacerlo podría causar riesgos de seguridad. El uso de este producto en una manera no especificada por Audio Precision puede resultar en un riesgo de seguridad.

Este producto es para uso en interiores-Categoría de instalación II, Categoría de medición I, grado de contaminación 2.

Para limpiar la caja de este producto, utilice un trapo o cepillo suave para remover el polvo acumulado. Se puede utilizar un detergente neutro para remover la suciedad o manchas remanentes. No utilice limpiadores fuertes o abrasivos. Limpie todas las superficies con un trapo húmedo.

Esta unidad se suministra con cuatro patas en la superficie inferior y cuatro patas en la superficie del costado derecho. La unidad solamente debe operarse al estar apoyada en las patas de la superficie inferior. Las patas en el costado derecho se proporcionan para conveniencia y estabilidad al transportar la unidad. NO opere la unidad al estar apoyada sobre las patas laterales.

Símbolos de seguridad

Los siguientes símbolos podrían estar marcados en los paneles o cubiertas del equipo o los módulos, y se utilizan en este manual:

¡ADVERTENCIA!—Este símbolo le alerta sobre una condición potencialmente peligrosa, tal como la presencia de voltaje peligroso que pudiera representar un riesgo de descarga eléctrica. Consulte la etiqueta de advertencia adjunta y tenga mucha precaución.

¡ATENCIÓN!—Este símbolo le alerta de consideraciones operativas importantes o de una condición operativa potencial que pudiera dañar al equipo. Si usted ve este símbolo en el equipo, consulte el Manual del operador o el Manual del usuario para instrucciones de precaución.

TERMINAL DE TIERRA FUNCIONAL—Un terminal marcado con este símbolo está conectado eléctricamente a un punto de referencia de un circuito de medición o sal-

ida y se supone está conectado a tierra (aterrizado) para algún fin funcional diferente a la seguridad.

TERMINAL DE TIERRA DE PROTECCIÓN—Un terminal marcado con este símbolo está enlazado a partes conductores del instrumento y se supone que está conectado a un sistema externo de protección a tierra (aterrizada).

Exención de responsabilidad

Audio Precision advierte contra el uso de este producto de una manera no especificada por el fabricante. El hecho de no hacerlo de la manera indicada invalidaría las garantías, causaría daño al equipo, o representaría un riesgo de seguridad para el personal.

Installation

Software

The APx511 hearing instrument analyzer system uses the award-winning APx500 measurement software, whether using the GUI in the foreground, or controlling APx500 in the background using the API. This is the same software used in the APx525and APx585 analyzer families.

APx “B Series” analyzers

All analyzers shipped in late December 2018 (or afterward) have a new embedded processor and enhanced security provisions. These analyzers are designated “B Series” and carry “B Series” nomenclature. “B Series” APx analyzers do not require an APx KeyBox (see below), but may require authorization codes to enable APx500 software or software options.

The APx KeyBox

If you are using APx500 software version 4.6 or later with an earlier APx analyzer (non “B Series”), you must attach an authenticated APx KeyBox to the Software Options connector on the analyzer rear panel.

The APx KeyBox must be programmed with your analyzer’s serial number at the Audio Precision factory, and cannot be used with any other APx analyzer. You may require authorization codes to enable APx500 software or software options.

Note that without a properly authenticated APx KeyBox attached, APx500 version 4.6 or later will only run in demo mode. If you need a KeyBox, locate your analyzer serial number and go to https://audioprecision.com/get-keybox/ to complete the order form.

Analyzer serial numbers are located on the configuration label on the analyzer rear panel, and on the calibration label on the forward edge of the top panel.

PC system requirements

The APx500 measurement software requires a personal computer (PC) with the following features and capabilities:

- Operating system: Microsoft Windows 10 (64-bit) or Windows 8.1 (64-bit). Windows 10 (64-bit) is recommended.
- Intel i5 or better processor running at a clock speed of at least 2.5 GHz. AMD Processors with similar specifications are also supported.
- At least 8 GB of RAM. 16 GB is recommended.
- At least 1.5 GB of free hard disk space. An SSD for the operating system drive is highly recommended.
- A CD-ROM optical disc drive or Internet connection to download and install software.
- A USB 2.0 port or USB 3.0 port; two are required for optional switcher use.
- A color monitor with SXGA (1280 x 1024) video graphics support. Video resolution of 1900 x 1080 or greater is recommended.

System performance is sensitive to processor speed; faster processors will yield faster results.

APx500 is data intensive and it is recommended that other data-intensive applications not be run concurrently.

This includes Audio Precision's AP2700, APWIN or ATS.

Installation

To install the measurement software, insert the APx500 application disc into the optical drive on the PC and follow the instructions in the installation dialog. If you don't have the APx500 application disc, you can download APx500 from the Audio Precision Web site at audioprecision.com.

NOTE: You must have local administrator rights to install APx500 software. Go to User Accounts in the Windows Control Panel, or check with your network administrator.

Running the software without instrument hardware attached

NOTE: You must have standard user rights or administrator rights to operate APx500 software. Guest users are not supported.

You can launch the APx500 software without instrument hardware attached. When no hardware is detected, APx500 will present you with the following dialog box:

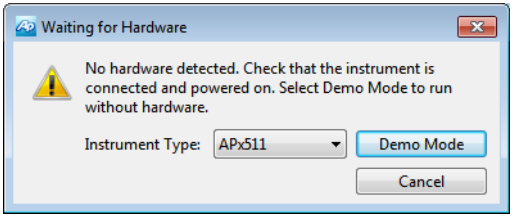

Select “Demo Mode.” APx500 will run in demo mode, which allows you to explore the user interface but does not enable any measurement functions. Input data shown in Demo Mode is false data, generated for display only.

At first launch, Demo Mode runs simulating attachment to an APx585. To run Demo Mode simulating anther instrument, select that option from the Instrument Type menu.

Running the software with instrument hardware attached

NOTE: You must have standard user rights or administrator rights to operate APx500 software. Guest users are not supported.

Connecting the instrument to your PC

Before connecting your APx511 instrument to your PC, install the APx500 measurement software as described above. Connecting the instrument prior to software installation may cause Windows to select an incorrect USB driver for the instrument.

USB driver selection

The measurement software communicates with the APx511 using a USB 2.0 interconnection. Once the software is successfully installed, connect one end of the USB cable to a USB 2.0 port on the PC, and the other end to the PC INTERFACE port on the rear of the APx511. We strongly recommend that you use the USB cable included with your instrument (AP part number CAB-APSI). We have tested other USB cables that perform poorly.

Note: Some PCs have optional USB ports on the front of the PC, or on extension brackets on the rear. In many cases these convenience ports have compromised performance due to the extra cable length within the PC. We recommend using USB ports directly connected to the PC motherboard, typically at the rear of the PC.

Connect the APx511 mains power cord to the instrument and to a source of ac mains power. See **Setting up the hardware** below for more information about mains connections.

Turn the instrument on by rocking the mains power switch up to **ON** (|). The mains power switch is located in the power entry module on the rear of the APx511. Windows will detect the presence of the APx511 on the USB port and will open the Hardware Update Wizard to

search for the correct software driver. Select “Install the software automatically.” Windows will find the Audio Precision driver software installed with APx500 and connect to the APx511.

Launch APx500 by double-clicking on the installed shortcut. With the APx511 connected, you may be asked to update the instrument firmware during the first launch of the measurement software. APx500 will start, and in a short time you will be presented with the opening screen. Refer to the APx500 User’s Manual for more information about making measurements.

The APx500 User’s Manual is available as a PDF on the APx500 Application Disc and online at audioprecision.com; a hard-copy version can be ordered from Audio Precision or your local distributor.

Setting up the hardware

Connecting your instrument to the electrical mains supply

The APx511 instrument must be connected to a 50–60 Hz alternating current (ac) electrical mains supply, maximum voltage 250 Vrms.

The instrument has been configured at the factory for the expected voltage at its intended destination, as ordered. The voltage setting and fusing arrangement will normally be correct unless the instrument has been transported into another area. The power entry module has a strip of indicator tape showing its mains voltage setting. This tape must be removed before use.

*You **MUST** be sure that the APx511 instrument mains power configuration is correct for the electrical mains power supplied in your area. If you are not sure, do not plug the instrument into the mains power. Follow the instructions below to check or change the instrument mains supply voltage selection.*

The mains power supply is applied to your APx511 instrument through the power entry module located on the rear panel. Before connecting the power cord, confirm that the input voltage selection and fusing arrangement in the power entry module are correct for your mains power supply.

Figure 2. Detail of power entry module on APx511 instrument rear panel. The mains power switch is to the left.

Checking the mains supply voltage configuration

The white plastic voltage indicator pin protrudes through one of the four labeled holes in the module cover to indicate the selected input voltage. Figure 2 shows the pin in the second position, indicating 120 V. Check to see that the indicated voltage matches your mains supply voltage. If it does not, change the mains supply voltage configuration as described below.

Opening the power entry module

Unplug the power cord from the instrument before changing fuses or performing any other operations described in this section.

To open the power entry module, refer to Figure 3 and proceed as follows:

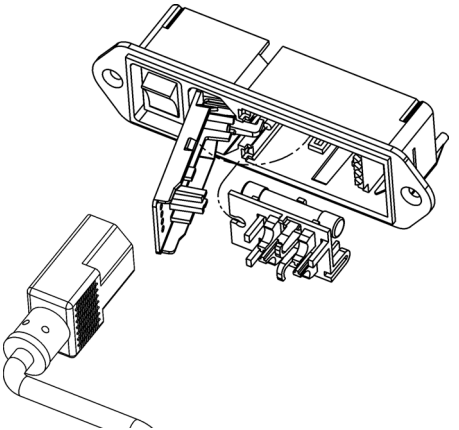

Figure 3. Power entry module door and fuse block.

- Remove the mains power supply cord from the power cord connector.
- Locate the slot in the module cover door hinge. The hinge is a the left side of the cover door, and the slot in the hinge is visible in the power cord connector cavity. Insert a small screwdriver or similar tool in the slot and pry the cover door hinge outward. The cover door will snap out, and then can be pivoted on

its hinge for access to the fuse block assembly and voltage selector card.

Changing the Mains Supply Voltage Configuration

- Open the Power Entry Module as described above.
- The voltage selector card is a small circuit board fitted with a white plastic indicator pin, installed in a housing on the right side of the Power Entry Module as shown in Figure 4. Pull the voltage selector card straight out of the housing, using narrow pliers to grab the card. Do not use the indicator pin as a handle.

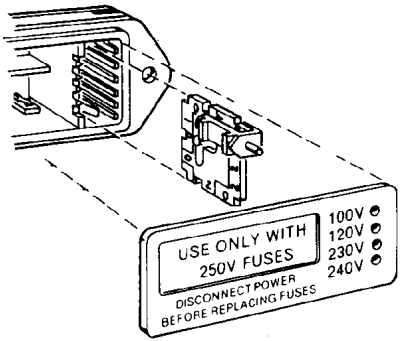

Figure 4. Changing the mains power supply voltage.

- Orient the selector card so that the desired input voltage is readable at the bottom, shown in Figure 5. Then move the indicator pin to point UP, opposite the indicated voltage. Seat the pin assembly in the notch on the board edge.
- Insert the voltage selector card into the housing with the printed side of the card facing toward the mains power connector. The card edge indicating the desired voltage should enter the housing first.
- Confirm that the correct fuse or fuse combination is installed for the intended input voltage (refer to the fuse ratings marked on the instrument rear panel). If necessary, change the fuse type as described in the following section.

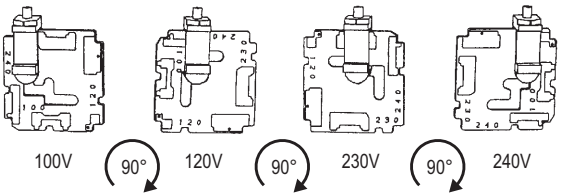

Figure 5. Voltage card selector orientation.

- Close the module the cover door and verify that the indicator pin shows the desired voltage.
- Once you have verified that the line voltage selection is correct, connect the power cord from a mains

power outlet to the power cord connector on the instrument rear panel.

Fuse information

The power entry module accommodates two fusing arrangements, as illustrated in Figure 6.

100/120 VAC operation

The 100/120 VAC fusing arrangement uses a single type 3AG (0.25" x 1.25") slo-blo fuse. Audio Precision recommends only the following replacement fuse:

- 1 each Littelfuse 313 Series, 800 mA 3AG 250 V slo-blo glass fuse.

230/240 VAC operation

The 230/240 VAC fusing arrangement uses two 5 x 20 mm IEC-approved type T fuses. Audio Precision recommends only the following replacement fuses:

- 2 each Littelfuse 213 Series, 400 mA 250 V 5 x 20 mm Time Lag (slo-blo) glass fuses
  or
- 2 each Littelfuse 218 Series, 400 mA 250 V 5 x 20 mm Time Lag (slo-blo) glass fuses.

Refer to the label on the instrument rear panel for fuse current ratings.

Changing the fusing arrangement

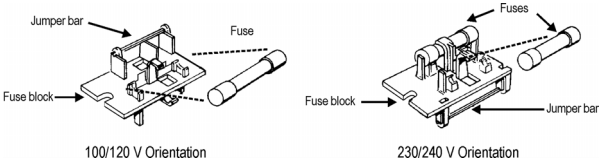

Figure 6. Fuse block orientation for 100/120 VAC and 230/240 VAC operation.

To replace a fuse or change the fusing arrangement, proceed as follows:

- Remove the mains power cord from the power cord connector and open the Power Entry Module as described above.
- Using narrow pliers, pull the fuse assembly out of the housing.
- Change or add the correct fuses as necessary, referring to Figure 6. Refer to the instrument rear panel for the correct fuse electrical current rating.
- Insert the fuse assembly in the housing, with the side of the assembly that carries the fuse(s) for your desired fusing arrangement facing into the housing. Press the fuse assembly firmly into the housing.
- Confirm that the line voltage selection is correct for your mains voltage and your fusing arrangement.

Once you have verified that the line voltage selection is correct, connect the power cord from a mains power outlet to the power cord connector on the instrument rear panel.

Installation (Fr)

Logiciel

Tous les systèmes APx utilisent le même logiciel de mesure lauréat, soit APx500.

Analyseurs APx « B Series »

Tous les analyseurs livrés à compter de la fin de décembre 2018 seront dotés d'un processeur intégré et de dispositions de sécurité améliorées. Ces analyseurs portent la désignation « B Series » et suivent la nomenclature « B Series ». Les analyseurs APx « B Series » n'exigent pas de dispositif APx KeyBox (voir ci-dessous), mais peuvent nécessiter des codes d'autorisation afin d'activer le logiciel ou les options de logiciel APx500.

Dispositif APx KeyBox

Si vous utilisez la version 4.6 ou une version plus récente du logiciel APx500 avec un analyseur APx antérieur (pas « B Series »), vous devez installer un dispositif APx KeyBox authentifié au connecteur Software Options sur le panneau arrière de l'analyseur.

Le dispositif APx KeyBox doit être programmé avec le numéro de série de votre analyseur à l'usine d'Audio Precision et ne peut être utilisé avec aucun autre analyseur APx. Des codes d'autorisation afin d'activer le logiciel ou les options de logiciel APx500 peuvent être requis.

Veuillez noter que sans l'installation d'un dispositif APx KeyBox correctement authentifié, le logiciel APx500 version 4.6 ou plus récente ne fonctionnera qu'en mode de démonstration. Si vous avez besoin d'un dispositif KeyBox, trouvez le numéro de série de votre analyseur et allez à https://audioprecision.com/get-keybox/ afin de remplir le formulaire de commande.

Le numéro de série de l'analyseur se trouve sur l'étiquette de configuration à l'arrière de l'analyseur et sur

l'étiquette d'étalonnage sur le bord avant du panneau supérieur.

Exigences de système pour l'ordinateur personnel (PC)

Le logiciel de mesure APx500 peut être très exigeant pour l'ordinateur personnel (PC) qui l'exécute.

Demandes de mesure modérées

Les demandes de mesures modérées (bandes passantes de mesure de moins de 90 kHz, nombre de canaux de 2 ou 1) fonctionneront adéquatement avec un PC détenant ces caractéristiques minimales :

- Système d'exploitation : Microsoft Windows 10 (64 bit) ou Windows 8.1 (64 bit). Windows 10 (64 bit) est recommandée.
- Intel i5 processeur ou AMD processeur tournant à une vitesse d'horloge d'au moins 2.5 GHz.
- Au moins 8 Go de mémoire vive. 16 Go de mémoire vive est recommandée.
- Au moins 1.5 Go d'espace libre sur le disque dur. Un disque SSD pour le système d'exploitation est recommandée.
- Un lecteur optique de CD-ROM ou une connexion Internet pour télécharger et installer le logiciel.
- Un port USB 2.0 ou USB 3.0; deux ports requis dans le cas de l'utilisation du DCX-127 ou du commutateur optionnel.
- Un moniteur couleur et une carte vidéo avec qualité SXGA ou supérieure. Une résolution vidéo de 1900 x 1080 ou supérieure est recommandée.

Les demandes de mesures de l'appareil APx511 respectent habituellement cette plage modérée.

Pour en savoir plus à ce sujet, consultez le document courant APx PC Minimum System Solutions (solutions de système minimales pour ordinateur personnel pour APx) sur notre site web, à l'adresse www.audioprecision.com. Ces informations vous aideront à déterminer si un ordinateur personnel, en particulier, convient à l'utilisation d'un appareil APx.

Installation

Pour installer le logiciel de mesure, insérez le CD-ROM APx500 dans le lecteur optique de l'ordinateur et suivez les instructions dans la fenêtre de dialogue du logiciel d'installation. Si vous n'avez pas de disque d'application APx500, vous pouvez le télécharger à partir du site web d'Audio Precision, à l'adresse audioprecision.com.

REMARQUE : Vous devez détenir les droits d'administrateur local pour installer le logiciel APx500. Dans le panneau de configuration (Control Panel) de Windows, consultez les comptes d'utilisateur (User Accounts) ou consultez votre administrateur de réseau.

Exécuter le logiciel sans brancher l'instrument

REMARQUE : Vous devez détenir des droits d'utilisateur standard ou des droits d'administrateur pour utiliser le logiciel APx500. Les utilisateurs invités ne sont pas pris en charge.

Vous pouvez exécuter le logiciel APx500 sans brancher l'instrument. Lorsqu'aucun appareil n'est détecté, APx500 vous présente la fenêtre de dialogue suivante :

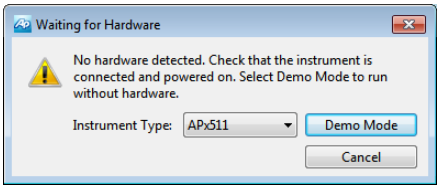

Sélectionner le « Demo Mode » (mode démo). APx500 sera exécuté en mode démo, ce qui vous permet d'explorer la surface d'utilisateur, mais pas de prendre des mesures. Les données d'entrée présentées en mode démo sont de fausses données, destinées uniquement à des fins de présentation.

À partir du menu Instrument Type (type d'instrument), sélectionnez un instrument à simuler en mode démo.

Exécuter le logiciel avec l'instrument branché

REMARQUE : Vous devez détenir des droits d'utilisateur standard ou des droits d'administrateur pour utiliser le logiciel APx500. Les utilisateurs invités ne sont pas pris en charge.

Brancher l'instrument à votre ordinateur personnel

Avant de brancher votre instrument APx à votre ordinateur, installez le logiciel de mesure APx500 comme décrit plus haut. Brancher l'instrument avant d'installer le logiciel peut entraîner la sélection du mauvais pilote USB pour l'instrument.

Sélection de pilote USB

Le logiciel de mesure communique avec l'instrument à l'aide d'une interconnexion USB 2.0. Une fois l'installation du logiciel réussie, branchez une extrémité du câble USB à un port USB 2.0 de l'ordinateur, et l'autre extrémité au port PC INTERFACE situé à l'arrière de l'instrument. Nous vous recommandons fortement d'utiliser le câble USB fourni avec votre instrument (numéro de commande AP CAB-APSI). Nous avons testé d'autres câbles USB dont le fonctionnement est médiocre.

REMARQUE : Certains ordinateurs sont équipés de ports USB optionnels à l'avant, ou sur des supports de prolongation à l'arrière. Dans bien des cas, ces ports pratiques compromettent la performance étant donné la longueur de câble supplémentaire installée dans l'ordinateur. Nous vous recommandons d'uti-

liser les ports USB directement branchés à la carte mère de l'ordinateur, soit habituellement ceux qui sont placés à l'arrière de l'ordinateur.

Branchez le cordon d'alimentation électrique de l'instrument à celui-ci et à une source d'alimentation électrique c.a. Voir « Setting up the hardware » (configurer l'appareil) ci-dessous pour obtenir de plus amples renseignements sur les raccordements au secteur.

Allumez l'instrument en basculant le bouton d'alimentation en position sous tension (|). Le commutateur d'alimentation principal est situé dans le module d'entrée d'alimentation, à l'arrière de l'instrument.

Microsoft Windows détectera la présence de l'instrument branché au port USB et lancera le logiciel Hardware Update Wizard qui recherchera le bon pilote logiciel à installer. Sélectionner « Install the software automatically » (installation automatique du logiciel). Windows trouvera le logiciel pilote Audio Precision installé avec APx500 et branché à l'instrument.

Lancez APx500 en cliquant deux fois sur le raccourci. Une fois l'instrument branché, on pourrait vous demander de mettre à jour le micrologiciel de l'instrument lors de la première exécution du logiciel de mesure. APx500 démarrera et, peu de temps après, affichera l'écran d'accueil. Consultez le manuel de l'utilisateur du logiciel APx500 pour de plus amples renseignements à propos des prises de mesures.

Le manuel de l'utilisateur du logiciel APx500 est disponible en format PDF sur le disque de l'application APx500 et en ligne à l'adresse audioprecision.com; il est possible de commander un exemplaire imprimé auprès d'Audio Precision ou de votre distributeur local.

Configurer l'appareil

Branchement de votre instrument à l'alimentation secteur

L'instrument APx doit être branché à une alimentation secteur (c.a.) de 50–60 Hz, et à une tension maximale de 250 V RMS.

L'instrument a été configuré en usine pour la tension attendue à sa destination prévue, tel que précisé dans la commande. Le réglage de tension et l'agencement des fusibles devraient être appropriés, à moins que l'instrument soit transporté dans une autre région. Le module d'entrée d'alimentation est doté d'un ruban indicateur qui précise le réglage de tension secteur. Ce ruban doit être enlevé avant l'utilisation.

Vous DEVEZ vous assurer que la configuration d'alimentation secteur de l'instrument est appropriée en fonction de l'alimentation secteur fournie dans votre région. En cas de doute, ne branchez pas l'instrument à l'alimentation secteur. Suivez les instructions ci-dessous pour vérifier ou modifier la tension d'alimentation secteur.

L'alimentation secteur est appliquée à votre instrument APx par l'entremise du module d'entrée d'alimentation situé sur le panneau arrière. Avant de brancher le cordon

d'alimentation, confirmez que la tension d'entrée et l'arrangement des fusibles du module d'entrée d'alimentation conviennent à votre alimentation secteur.

Figure 2. Détail du module d'entrée d'alimentation sur le panneau arrière de l'instrument APx. Le commutateur d'alimentation secteur est situé à gauche.

Vérifier la configuration de la tension d'alimentation secteur

La cheville indicatrice de tension en plastique blanc est en saillie de l'un des quatre orifices étiquetés sur le couvercle du module, indiquant la tension d'entrée sélectionnée. La figure 2 montre la cheville dans la deuxième position, indiquant 120 volts. Vérifiez si la tension indiquée correspond à la tension d'alimentation secteur de votre région. Dans le cas contraire, modifiez la configuration de la tension secteur comme décrit ci-dessous.

Ouvrir le module d'entrée d'alimentation

Débranchez le cordon d'alimentation de l'instrument avant de changer des fusibles ou d'effectuer toute autre opération décrite dans cette section.

Pour ouvrir le module d'entrée d'alimentation, consultez la figure 3 et procédez comme suit :

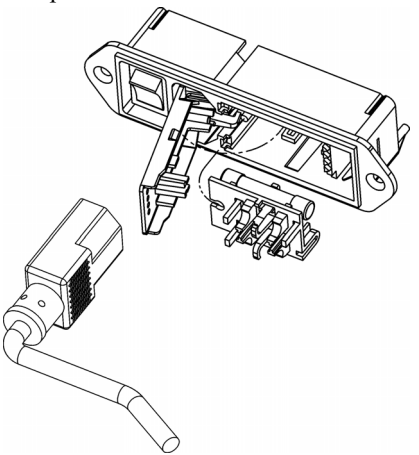

Figure 3. Couvercle du module d'entrée d'alimentation et bloc de fusibles.

- Retirez le cordon d'alimentation secteur du connecteur d'alimentation.
- Localisez la fente dans la charnière du couvercle du module. La charnière est du côté gauche du couvercle, et la fente dans la charnière est visible à partir de la cavité du connecteur de cordon d'alimentation. Insérez un petit tournevis ou un outil semblable dans la fente et écartez le couvercle vers l'extérieur. Le couvercle s'enlèvera et pourra ensuite être pivoté sur sa charnière pour donner accès au bloc de fusibles et à la carte de sélection de tension.

Changer la configuration de la tension d'alimentation secteur

- Ouvrez le module d'entrée d'alimentation, comme décrit ci-dessus.
- La carte de sélection de tension est un petit circuit imprimé équipé d'une cheville indicatrice en plastique blanc, installée dans un boîtier situé à la droite du module d'entrée d'alimentation, comme illustré à la figure 4. Tirez la carte de sélection de tension hors du boîtier à l'aide de fines pinces. N'utilisez pas la cheville indicatrice comme prise.

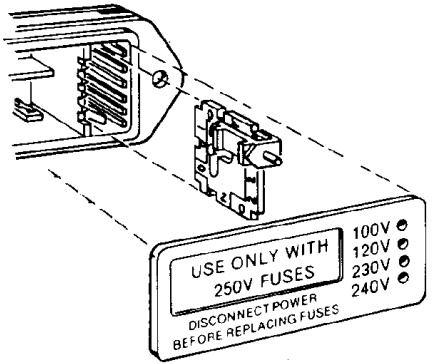

Figure 4. Modifier la tension d'alimentation secteur.

- Orientez la carte de sélection pour pouvoir lire la tension d'entrée désirée, dans le bas, comme illustré à la figure 5. Ensuite, déplacez la cheville indicatrice pour qu'elle pointe vers le HAUT, à l'opposé de la tension indiquée. Insérez la cheville dans l'encoche située sur le bord du circuit.
- Insérez la carte de sélection de tension dans le boîtier, avec le côté imprimé de la carte faisant face au connecteur d'alimentation secteur. Le bord de la carte indiquant la tension désirée devrait être inséré en premier dans le boîtier.

- Confirmez que le bon fusible ou la bonne combinaison de fusibles sont installés en fonction de la tension d'entrée prévue (consultez les tensions nominales des fusibles inscrites sur le panneau arrière de l'instrument). Au besoin, changez le type de fusible comme décrit dans la section suivante.

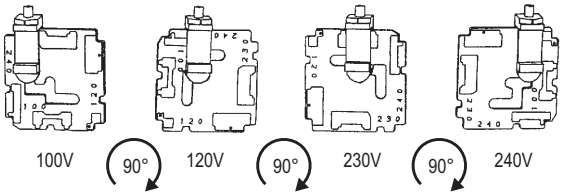

Figure 5. Orientation de la carte de sélection de tension.

- Fermez le couvercle du module et vérifiez si la cheville indicatrice montre la tension désirée.
- Une fois que vous avez vérifié que la sélection de tension est correcte, branchez le cordon d'alimentation d'une prise secteur au connecteur de cordon d'alimentation, sur le panneau arrière de l'instrument.

Informations sur les fusibles

Le module d'entrée d'alimentation convient à deux arrangements de fusibles, comme illustré à la figure 6.

Fonctionnement à 100/120 V c.a.

L'arrangement des fusibles pour le fonctionnement à 100/120 V c.a. utilise un seul type de fusible 3AG (0,25 po x 1,25 po) à action retardée. Audio Precision recommande uniquement le fusible de rechange suivant :

- 1 fusible de verre à action retardée Littelfuse série 313, 800 mA 3AG 250 V.

Fonctionnement à 230/240 V c.a.

L'arrangement des fusibles pour le fonctionnement à 230/240 V c.a. utilise deux fusibles de type T de 5 x 20 mm approuvés par la CEI. Audio Precision recommande uniquement les fusibles de rechange suivants :

- 2 fusibles de verre à action retardée Littelfuse 213 Series, 400 mA 250 V, 5 x 20 mm

ou

- 2 fusibles de verre à action retardée Littelfuse série 218, 400 mA 250 V, 5 x 20 mm.

Consultez l'étiquette située sur le panneau arrière de l'instrument pour connaître les tensions nominales de courant des fusibles.

Modifier l’arrangement des fusibles

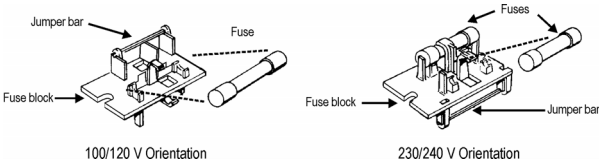

Figure 6. Orientation du bloc de fusibles pour le fonctionnement à 100/120 V c.a. et à 230/240 V c.a.

Pour remplacer un fusible ou pour modifier l’arrangement des fusibles, procédez comme suit :

- Retirez le cordon d’alimentation secteur du connecteur de cordon d’alimentation et ouvrez le module d’entrée d’alimentation comme décrit ci-dessus.
- À l’aide de pinces étroites, tirez la cartouche de fusibles hors du boîtier.
- Remplacez des fusibles ou ajoutez les bons fusibles, au besoin, en consultant la figure 6. Consultez l’étiquette située sur le panneau arrière de l’instrument pour connaître les tensions nominales de courant des fusibles.
- Insérez la cartouche de fusibles dans le boîtier, avec le côté de la cartouche contenant le(s) fusible(s) selon votre arrangement désiré faisant face au boîtier. Insérez fermement la cartouche de fusibles dans le boîtier.
- Confirmez que la sélection de tension secteur est correcte en fonction de la tension secteur de votre région et de votre arrangement de fusibles.

Une fois que vous avez vérifié que la sélection de tension est correcte, branchez le cordon d’alimentation d’une prise secteur au connecteur du cordon d’alimentation, sur le panneau arrière de l’instrument.

Instalación

Software

Todos los sistemas APx utilizan el mismo software laureado, APx500.

Analizadores APx “B Series”

Todos los analizadores enviados a fines de diciembre de 2018 (o posteriormente) tienen un nuevo procesador integrado y provisiones de seguridad mejoradas. Estos analizadores se designaron como “B Series” y llevan la nomenclatura “B Series”. Los analizadores APx “B Series” no requieren el APx KeyBox (ver más abajo), pero pueden requerir códigos de autorización para habilitar el software APx500 o las opciones de software.

El APx KeyBox

Si está usando el software APx500 versión 4.6 o posterior con un analizador APx anterior (que no sea “B Series”), debe acoplar un APx KeyBox autenticado al conector “Software Options” en el panel trasero del analizador.

El APx KeyBox debe ser programado con el número de serie de su analizador en la fábrica de Audio Precision, y no puede ser usado con ningún otro Analizador APx. Puede requerir códigos de autorización para habilitar el software APx500 o las opciones de software.

Tenga en cuenta que sin la APx KeyBox debidamente autenticada acoplada, el APx500 versión 4.6 o posterior solo correrá en modo de demostración. Si necesita una KeyBox, localice el número de serie del analizador y vaya a https://audioprecision.com/get-keybox/ para completar el formulario de orden.

Los números de serie del analizador se localizan en la etiqueta de configuración en el panel trasero del analizador,

y en la etiqueta de calibración en el borde delantero del panel superior.

Requisitos de sistema de la PC

El software APx500 para medición puede ser muy exigente de las capacidades de la computadora personal (PC) que opera el software APx.

Demandas de medición moderadas

Las demandas de medición moderadas (anchos de banda de medición de menos de 90 kHz, conteos de canales de 2 o de 1) se ejecutarán adecuadamente usando una PC con las siguientes especificaciones mínimas:

- Sistema operativo: Microsoft Windows 10 (64 bit) o Windows 8.1 (64 bit). Se recomienda Windows 10 (64 bit).
- Un procesador Intel i5 o superior con una velocidad de reloj de por lo menos 2.5 GHz. Un procesador AMD similar también funcionará.
- Por lo menos 8 GB de RAM. Se recomienda 16 GB RAM.
- Por lo menos 1.5 GB de espacio libre en disco duro. Se recomienda una unidad SSD para la unidad del sistema operativo.
- Una unidad lectora óptica de CD ROM o conexión a Internet para descarger e instalar el software.
- Un puerto USB 2.0 o USB 3.0; se requieren dos para usar un interruptor opcional o un DCX-127.
- Un monitor a color y una tarjeta de vídeo con al menos capacidades SXGA (1280x1024). Se recomienda una resolución de vídeo de 1900 x 1080 o superior.

Las demandas de medición del APx515 caen típicamente dentro de este rango moderado.

Para obtener más información, consulte el documento actualizado Soluciones Mínimas del Sistema APx para PC [APx PC Minimum System Solutions] visite nuestro sitio web en www.audioprecision.com. Esta información le ayudará a determinar si una PC específica es adecuada para usarse con APx.

Instalación

Para instalar el software de medición, inserte el CD-ROM del APx500 dentro de la unidad óptica de la PC y siga las instrucciones en el diálogo de instalación. Si usted no tiene el disco de la aplicación disco de aplicación del APx500 [APx500 application disc], puede descargar APx500 del sitio web de Audio Precision en www.audioprecision.com.

NOTA: Usted debe tener derechos de administrador local para instalar el software APx500. Ingrese a Cuentas de usuarios en el Panel de Control de Windows, o revise con su administrador de red.

Operación del software sin el hardware del instrumento conectado

NOTA: Usted debe tener derechos estándar de usuario o de administrador para operar el software APx500. No se permiten usuarios invitados.

Usted puede iniciar el software APx500 sin tener conectado el hardware del instrumento. Cuando no se detecta el hardware, el APx500 le mostrará el siguiente cuadro de diálogo:

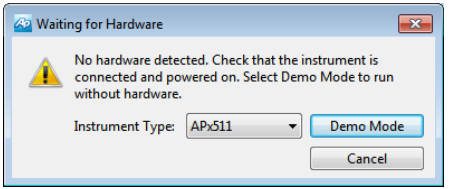

Seleccione “Demo Mode” [Modo de demostración]. El APx500 funcionará en modo de demostración, lo que le permite explorar la interfaz de usuario pero no habilita ninguna función de medición. Los datos de entrada que se muestran en el Demo Mode [Modo de demostración] son falsos, se generan solamente para fines de visualización.

Desde el menú de Instrument Type [Tipo de instrumento], seleccione un instrumento a ser emulado en el Demo Mode [Modo de demostración].

Operación del software con el hardware del instrumento conectado

NOTA: Usted debe tener derechos estándar de usuario o de administrador para operar el software APx500. No se permiten usuarios invitados.

Conexión del instrumento a su PC

Antes de conectar su instrumento APx a su PC, instale el software de medición APx500 tal como se describió anteriormente. El conectar el instrumento antes de instalar el software puede resultar en que Windows seleccione un controlador de USB incorrecto para el instrumento.

Selección del controlador del USB

El software de medición se comunica con el instrumento utilizando una interconexión USB 2.0. Una vez que el software se haya instalado correctamente, conecte un extremo del cable USB a un puerto USB 2.0 en la PC, y el otro extremo al puerto de PC INTERFACE [INTERFAZ de la PC] en la parte posterior del instrumento. Recomendamos enfáticamente que use el cable USB incluido con su instrumento (AP número de orden CAB-APSI). Hemos probado otros cables USB con mal funcionamiento.

Nota: Algunas PC tienen puertos USB opcionales al frente de la PC, o en soportes de extensión en la parte posterior. En varios casos, estos puertos de conveniencia han afectado el rendimiento debido a la longitud adicional del cable dentro de la PC. Recomen-

damos usar estos puertos USB directamente conectados a la tarjeta madre de la PC, típicamente en la parte posterior de la PC.

Conecte al instrumento el cable de suministro de voltaje y a una red eléctrica de CA. Consulte “Setting up hardware” [Configuración del hardware] para obtener más información acerca de las conexiones a la red eléctrica.

Encienda el instrumento desplazando el interruptor de suministro de voltaje a ENCENDIDO(|). El interruptor de suministro de voltaje se encuentra en el módulo de entrada de energía en la parte trasera del instrumento.

Microsoft Windows detectará la presencia del instrumento en el puerto USB y abrirá el Hardware Update Wizard [Asistente de actualización de hardware] para buscar el controlador de software correcto. Seleccione "Install the software automatically" [Instalar el software automáticamente]. Windows encontrará el software del controlador de Audio Precision instalado con APx500 y se conectará al instrumento.

Ejecute APx500 haciendo doble clic en el acceso directo instalado. Con el instrumento ya conectado, se le podría pedir actualizar el firmware del instrumento durante la primera ejecución del software de medición. APx500 iniciará, y en un tiempo breve se mostrará la pantalla de inicio. Consulte el Manual del usuario del APx500 para obtener más información acerca de hacer las mediciones.

El Manual del usuario del APx500 está disponible como PDF en el Disco de Aplicación del APx500 y en línea en audioprecision.com, además puede solicitar una versión en papel de Audio Precision o de su distribuidor local.

Configuración del hardware

Conexión de su instrumento a la red de energía eléctrica

El instrumento APx debe conectarse a una fuente de alimentación de corriente alterna (AC) a 50–60 Hz, con un voltaje máximo de 250 Vrms.

El instrumento se ha configurado de fábrica para el voltaje esperado en su supuesto destino, tal como se adquirió. La configuración de voltaje y el arreglo de fusibles serán normalmente correctos a menos que el instrumento se haya transportado hacia otra área. El módulo de entrada de energía tiene una franja de cinta indicadora mostrando la configuración de voltaje de su fuente de alimentación. Esta cinta debe removerse antes de usarse.

Usted DEBE asegurarse que la configuración del voltaje de la fuente de alimentación del instrumento APx sea la correcta para los voltajes de alimentación suministrados en su área. Si no está seguro, no conecte el instrumento en la fuente de alimentación. Siga las instrucciones a continuación para verificar o cambiar la selección de voltaje de la fuente de alimentación del instrumento.

La fuente de alimentación de voltaje se aplica a su instrumento APx a través del módulo de entrada de energía localizado en el tablero trasero. Antes de conectar el cable de suministro, confirme que la selección del voltaje de entrada y el arreglo de fusibles en el módulo de

entrada de energía sean los correctos para su fuente de suministro de voltaje.

Figura 2. Detalle, módulo de entrada de energía en el panel posterior del instrumento APx. El interruptor de potencia está a la izquierda.

Revisión de la configuración del voltaje de la fuente de alimentación

El pasador de color blanco de plástico del indicador de voltaje resalta a través de uno de los cuatro orificios etiquetados en la cubierta del módulo, para indicar el voltaje de entrada seleccionado. La figura 2 muestra el pasador en la segunda posición, indicando 120 V. Revise para ver que el voltaje indicado corresponda con su voltaje de la fuente de alimentación. De no ser así, cambie la configuración del voltaje de la fuente de suministro tal como se describe a continuación.

Apertura del módulo de entrada de energía

Desconecte el cable de alimentación del instrumento antes de cambiar los fusibles o efectuar cualquier otra operación descrita en esta sección.

Para abrir el módulo de entrada de energía, consulte la Figura 3 y proceda de la siguiente manera:

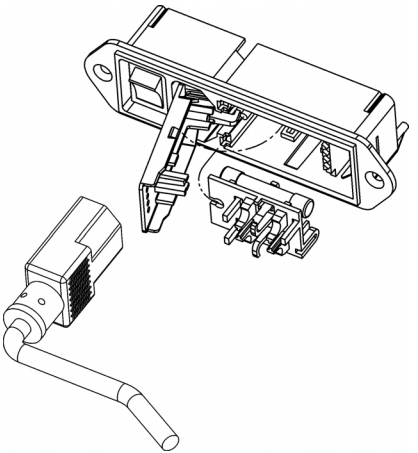

Figura 3. Puerta del módulo de entrada de energía y bloque de fusibles.

- Extraiga el cable de alimentación de voltaje del conector de cable de alimentación.
- Localice la ranura en la bisagra de la puerta de la cubierta del módulo. La bisagra se encuentra a la izquierda de la puerta de la cubierta, y la ranura en la bisagra es visible en la cavidad del conector del cable de alimentación. Inserte un desarmador pequeño o una herramienta similar en la ranura y empuje la bisagra de la puerta de la cubierta. La puerta de la cubierta se zafará, y luego podrá pivotarse sobre su bisagra para acceso al conjunto de ensamble de bloque y tarjeta selectora de voltaje.

Cambio de la configuración del voltaje de la fuente de alimentación

- Abra el módulo de la entrada de energía tal como se describe anteriormente.
- La tarjeta selectora de voltaje es una tarjeta de circuito pequeña equipada con un pasador indicador blanco de plástico, instalado en el lado derecho del módulo de entrada de energía, tal como se muestra en la Figura 4. Tire de la tarjeta selectora de voltaje recto hacia fuera de la carcasa, usando pinzas de punta para sujetar la tarjeta. No utilice el pasador indicador como un asa.

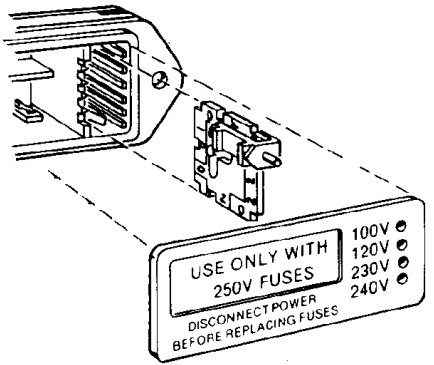

Figura 4. Cambio del voltaje de la fuente principal de alimentación.

- Oriente la tarjeta selectora para que el voltaje deseado en la entrada sea legible en la parte inferior, como se muestra en la Figura 5. Luego mueva el pasador indicador para señalar hacia ARRIBA, opuesto al voltaje indicado. Asiente el ensamble del pasador en la muesca en el borde del tablero.
- Inserte la tarjeta selectora de voltaje dentro de la carcasa con el lado impreso de la tarjeta hacia el conector de la fuente de suministro de alimentación. El

borde de la tarjeta que indica el voltaje deseado debería entrar primero en la carcasa.

- Confirme que esté instalado el fusible o combinación correcta de fusibles para el voltaje de entrada pretendido (consulte las capacidades de los fusibles marcadas en el panel posterior del instrumento). De ser necesario, cambie el tipo de fusible tal como se describe en la siguiente sección.

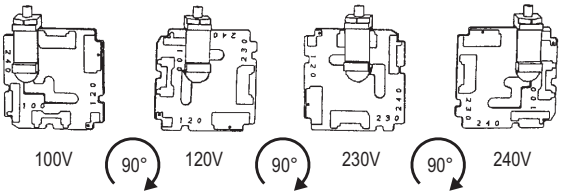

Figura 5. Orientación del selector de tarjeta de voltaje.

- Cierre la puerta de la cubierta del módulo y verifique que la pata del indicador muestre el voltaje deseado.
- Una vez que haya verificado que la selección del voltaje de la línea es correcto, conecte el cable de suministro desde una toma de fuente de alimentación al conector del cable de suministro en el tablero posterior del instrumento.

Información de los fusibles

El módulo de entrada de energía puede recibir dos arreglos de fusibles, tal como se ilustra en la Figura 6.

Operación a 100/120 VCA

El arreglo de fusibles para 100/120 VCA usa un solo tipo de fusible de fundido lento 3AG (0.25" x 1.25"). Audio Precision solamente recomienda el siguiente fusible de reemplazo:

- 1 fusible tipo Littelfuse 313 Series, 800 mA 3AG 250 V de fundido lento.

Operación a 230/240 VCA

El arreglo de fusible 230/240 VCA usa dos fusibles 5x20 mm tipo RT aprobados por IEC. Audio Precision solamente recomienda los siguientes fusibles de reemplazo:

- 2 fusibles de vidrio Littelfuse 213 Series, 400 mA 250 V 5x20 mm con demora de tiempo (de fundido lento)

o

- 2 fusibles de vidrio Littelfuse 218 Series, 400 mA 250 V 5x20 mm con demora de tiempo (de fundido lento).

Consulte la etiqueta en el panel posterior del instrumento para las capacidades de corriente de los fusibles.

Cambio del arreglo de fusibles

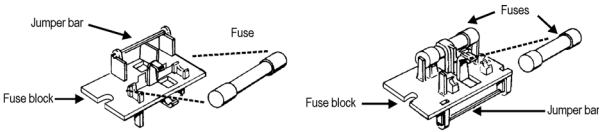

Figura 6. Orientación del bloque de fusibles para operación con 100/120 VCA y con 230/240 VCA.

Para reemplazar un fusible o cambiar el arreglo de fusibles, proceda de la siguiente manera:

- Extraiga el cable de alimentación desde el conector de cable de alimentación y abra el módulo de entrada de energía tal como se describió anteriormente.
- Use unas pinzas de punta para sacar el ensamble de fusibles de la carcasa.
- Cambie o agregue los fusibles correctos según sea necesario, consultando la Figura 6. Consulte el panel posterior del instrumento para las capacidades correctas de corriente eléctrica de los fusibles.
- Inserte el ensamble de fusibles en la carcasa, con el lado del ensamble que contiene los fusibles para la configuración de fusibles que desea, orientados hacia la carcasa. Presione firmemente el ensamble de fusibles al interior de la carcasa.
- Confirme que la selección de la línea de voltaje sea la correcta para su voltaje de suministro y su arreglo de fusibles.

Una vez que haya verificado que la selección del voltaje de la línea es correcto, conecte el cable de alimentación desde una toma de fuente de alimentación al conector del cable de suministro en el panel posterior del instrumento.

APx511 B Series
Hearing Instrument Analyzer Specifications

with APx500 v5.0 or higher measurement software
January 2023 NP0020.00040 r001

Characteristic	Specifications	Supplemental Information
ANALOG GENERATOR		
Number of Channels	2, independent amplitude control	*Speaker and telecoil output on DB-15 on rear panel*
Waveforms	Sine, continuously swept-sine, noise, IMD test signals, multitone, wave file playback	
Sine Characteristics		
Frequency Range (Fs)	2 Hz to 21.6 kHz	*Setting resolution is typically 45 µHz*
Frequency Accuracy	±(0.0003% + 100 µHz)	
Amplitude Range (Speaker)	0 to 5.7 V rms [16.1 Vpp] into 8 Ω	*4 W into 8 Ω*
Amplitude Range (Telecoil)	0 to 110 mA rms into 4 Ω	
Amplitude Accuracy, 1 kHz Speaker Output	±0.05 dB [±0.60 %]	
Amplitude Accuracy, 1 kHz Telecoil Output	±0.1 dB [±1.0 %]	
Flatness (1 kHz ref)		
100 Hz to 10 kHz	±0.05 dB	
10 kHz to 20 kHz	±0.1 dB	
Residual THD+N[1,2]		
Fs = 100 Hz–20 kHz	≤ (–80 dB + 2.0 µV), 20 kHz BW	*Typically ≤0.005% THD+N*
Non-Harmonic Content		*Typically ≤110 dB when Fs ≤20 kHz*

Characteristic	Specifications	Supplemental Information
Noise Characteristics		
Shape	White (<5 Hz to 0.45*SR), Pink (<10 Hz to 0.45*SR), IEC 60268-1 or BS EN 50332-1	
Amplitude Range	0 to 16.12 Vpp	*Amplitude calibration is approximate*
IMD Test Signals		
SMPTE & MOD		
Lower Frequency (LF)	40 Hz to 1.00 kHz	*LF tone must be ≤1/6 • HF tone.*
SMPTE Upper Frequency (HF)	2.00 kHz to 21.6 kHz	
MOD Upper Frequency (HF)	240 Hz to 21.6 kHz	
Mix Ratio (LF:HF)	10:1, 4:1 or 1:1	
Amplitude Range	0 to 16.12 V pp, speaker output; 0 to 310 mA pp, telecoil output.	
Amplitude Accuracy	±0.06 dB [±0.70%]	
Residual IMD[1,2,3]	≤0.01% [–80 dB], 4:1 mix ratio	
DFD & CCIF		
Tone Pair Mean Range	250 Hz to 21.56 kHz	$F_{mean} = (F1 + F2)/2.$
Tone Pair Difference Range	80 Hz to 2.0 kHz	$F_{diff} = \|F2 - F1\|$ F_{mean} *must be* $\geq 6 \cdot F_{diff}$
Amplitude Range	0 to 16.12 V pp, speaker output; 0 to 310 mA pp, telecoil output.	
Amplitude Accuracy	±0.06 dB [±0.70%]	
Residual IMD[1,2,3]	≤ 0.01% [–80 dB]	
Multitone, Wave File Playback		
Sample Rate Range (SR)	8 kS/s to 108 kS/s, and 175 kS/s to 192 kS/s	*Operation from 109 kS/s to 175 kS/s is possible, but with degraded flatness*
Maximum File Size	32 MSample.	

Characteristic	Specifications	Supplemental Information
Amplitude Range	0 to 16.12 V pp, speaker output; 0 to 310 mA pp, telecoil output.	*.Wav file must peak at digital full scale to obtain selected amplitude*
Flatness (1 kHz ref)		
SR = 175 kS/s to 192 kS/sec		*Typically <0.012 dB to 20 kHz*
SR = 8 kS/s to 108 kS/s		*Typically <0.04 dB to 20 kHz;* *max frequency limited to ≈0.45 • SR*
Spurious Content		*Typically <–100 dB*
Max Output Current		*speaker output current limit typically 1.5 A peak min*
ANALOG ANALYZER		
Number of Channels	1 auto-ranging.	*Max ADC sample rate = 192 kS/s*
Maximum Rated Input	48 V pp, 24 V dc	
Input Impedance		
Unbalanced	100 kΩ || ≈230 pF to BNC shield	*BNC shield to instrument chassis ground.*
Input Coupling	AC	*Typically <0.5 dB roll-off at 20 Hz*
Input Ranges	250 mV rms to 80 V rms, 10 dB steps	
Level (Amplitude) Measurement		
Microphone Input		
Range	< 1 µV to 16.9 Vrms	
Accuracy (1 kHz)	±0.05 dB [±0.60 %]	
Flatness (1 kHz ref)		
100 Hz to 10 kHz	±0.05 dB	
10 kHz to 20 kHz	±0.1 dB	
Speaker Voltage		
Range	< 1 µV to 5.7 Vrms	*Limited by speaker amplifier output*
Accuracy (1 kHz)	±0.05 dB [±0.60 %]	*Open circuit with no load applied*

Characteristic	Specifications	Supplemental Information
Flatness (1 kHz ref)		
100 Hz to 10 kHz	±0.05 dB	*8 Ω load*
10 kHz to 20 kHz	±0.1 dB	
Telecoil Input		
Range	< 1 µA to 110 mA rms	*Limited by telecoil output*
Accuracy (1 kHz)	±0.1 dB [±1.0 %]	*With 1 Ω load applied*
Flatness (1 kHz ref)		
10 Hz to 10 kHz	±0.05 dB	*With 1 Ω load applied*
10 kHz to 20 kHz	±0.1 dB	
THD+N Measurement (Microphone, Speaker Voltage, Telecoil Current)		
Fundamental Range	100 Hz to 20 kHz	
Measurement Range	0 to 100%	
Accuracy	±0.5 dB	
Residual THD+N[1,2]	≤ (–80 dB + 2.0 µV), 20 kHz BW	*Microphone, speaker and telecoil*
Level & THD+N Filters		
High-Pass	5 Hz to 500 Hz, or None	*1 Hz steps*
Low-Pass[4]	2.7 kHz to 90 kHz, or None	*100 Hz steps; very sharp roll-off characteristic exceeds AES-17*
Weighting	A-wt, C-wt, CCIR-1k, CCIR-2k, CCITT, C-message, 50 µs or 75 µs de-emph (with and without A-wt), or None	*Weighting filter is cascaded with the high-pass and low-pass bandwidth limiting filters*
IMD Measurement		
Test Signal Compatibility		
SMPTE & MOD	Any combination of 40 Hz–1 kHz (LF) and 240 Hz–21.6 kHz (HF), mixed in any ratio from 1:1 to 10:1 (LF:HF)	*LF tone must be ≤1/6 • HF tone.*

Characteristic	Specifications	Supplemental Information
DFD & CCIF	Any two-tone combination with mean frequency of 250 kHz–21.56 kHz and a difference frequency of 80 Hz–2.0 kHz	*F_{mean} = (F1 + F2)/2.* *F_{diff} = |F2 - F1|* *F_{mean} must be ≥6 • F_{diff}*
IMD Measured		
SMPTE	Amplitude modulation of HF tone	*Measurement BW is ≈40–750 Hz*
MOD	d2, d3, d2+d3, or d2+d3+d4+d5	*Use "d2+d3" for measurements per IEC60268*
DFD	d2, d3, d2+d3, or d2+d3+d4+d5	*Use "d2+d3" for measurements per IEC60268*
CCIF	d2 only	*"CCIF" is an archaic form of DFD that measures only the d2 product. CCIF uses a different 0 dB reference giving readings 2x higher than DFD.*
Measurement Range	0 to 20%	
Accuracy	±0.5 dB	
Residual IMD[1,2,3] (Speaker to Microphone, Speaker Voltage, Telecoil Current)		
SMPTE & MOD	≤–80 dB [0.01 %], 4:1 mix ratio	
DFD	≤–80 dB [0.010 %]	
Frequency Measurement		
Range	100 Hz to 20 kHz	
Accuracy	±0.0003% [3 ppm]	*V_{in} must be ≥ 5 mV.*
Resolution	6 digits	
DC Voltage Measurement		
Input Ranges	0.25 V to 80 V, 10 dB steps	*±24 Vdc maximum in 25 V range*
Accuracy		
250 mV and 800 mV ranges	±(0.7% reading + 1 mV)	
2.5 V to 80 V ranges	±(0.7% reading + 0.1% range)	

Battery simulator

Characteristic	Specifications	Supplemental Information
Number of outputs	1 on DB15 connector on rear panel	
Battery output specifications		
DC output range	0 to 2.048 Vdc	*Resolution typically 1 mV*
Resolution	≤ 15 mV	
Accuracy	±15mV	
DC output impedance	4.3 ohms ± 5%	
Noise	≤ 1 mV pp over 10kHz BW	
DC output current	≥ 30 mA dc	
Battery current measurement		
Current measurement range	0 to 30 mA	
Resolution	10 µA	
Accuracy	±5 %	*Release 3.3 and greater.*
GENERAL/ENVIRONMENTAL		
Power Requirements	100, 120, 230 or 240 Vac, 50–60 Hz, with safety ground via approved power cord, 75 VA max.	*Typical operating range is 90–110 Vac (100V), 108–132 Vac (120V), 198–242 Vac (230V), or 216–264 Vac (240V).*
Temperature Range		
Operating	0° C to +45° C	
Storage	–40° C to +75° C	
Humidity	90% to +40° C (non-condensing)	
Max Operating Altitude	3,000 m	*Derate max operating temperature above 2,000m by 1° C per 200m*
Stabilization Time	20 minutes	*Allow at least 60 minutes if unit has been stored in a significantly different environment prior to turn on, or if unit is to be calibrated or adjusted*

Characteristic	Specifications	Supplemental Information
EMC	IEC 61326-1:2005 / EN 61326-1:2006. Complies with EC Council Directives 2004/108/EC and 93/68/EEC.	*Emission and immunity levels are influenced by the shielding performance of interface and signal cables attached to the instrument. EMC compliance was demonstrated using Audio Precision cables*
Safety	IEC 61010-1:2001 / EN 61010-1:2001, CAN/CSA-C22.2 No. 61010-1-04, and UL Std No. 61010-1 (2nd Edition). Complies with EC Council Directives 2006/95/EC and 93/68/EEC.	*Equipment Class I,* *Installation Category II,* *Pollution Degree 2,* *Measurement Category I*
Dimensions		
Width	374.5 mm (14.75 inches)	*Including handle*
Height	79 mm (3.11 inches)	*2U rack mount tray available.*
Depth	413 mm (16.27 inches)	*Increase by ≈8mm [0.3 inches] if rear panel option keys are installed*
Weight	4.5 kg [9.9 lbs]	

Notes to Specifications

1. System specification including contributions from both generator and analyzer. Generator-only and/or analyzer-only contributions are typically less.
2. Generator load must be ≥ 8 Ω (speaker output), or ≤ 4 Ω telecoil output for specified performance.
3. Analyzer input must be ≥ 150 mV for specified performance. Analyzer set to measure “d2+d3” IMD products for MOD and DFD modes.
4. Maximum low-pass filter frequency is limited by analyzer input bandwidth setting.

Getting Started Guide

Overview

The B Series APx511 is an analog-only audio analyzer with connectivity and features specifically designed to test hearing instruments. The front panel provides five LED indicators, and the rear panel provides all the audio, control and mains power connections, and the mains power switch.

Hearing instrument testing is typically accomplished using a test chamber such as the Interacoustics TBS25. The chamber is fitted with an internal loudspeaker and a telephone magnetic field simulator (TMFS, or telecoil) for telecoil stimulation, and provides a means of connection for a measurement microphone / acoustic coupler combination and a battery simulator, both provided by the user.

The APx511 has an internal 4 watt power amplifier to drive the loudspeaker, a telecoil output, a powered microphone input and DC connections for the battery simulator.

See the Installation chapter earlier in this booklet for information about APx500 measurement software installation, mains power connection, and fusing. See the Specifications chapter for B Series APx511 performance characteristics.

Software control

The analyzer hardware runs under Audio Precision's APx500 measurement software. Although it is possible to use the APx511 using the APx500 user interface, a more typical use is to address the APx500 API using your proprietary automation software, with APx500 running in the background.

A .NET library of functions to perform and automate the tests described in IEC60118-7 and ANSI S3.22 is pro-

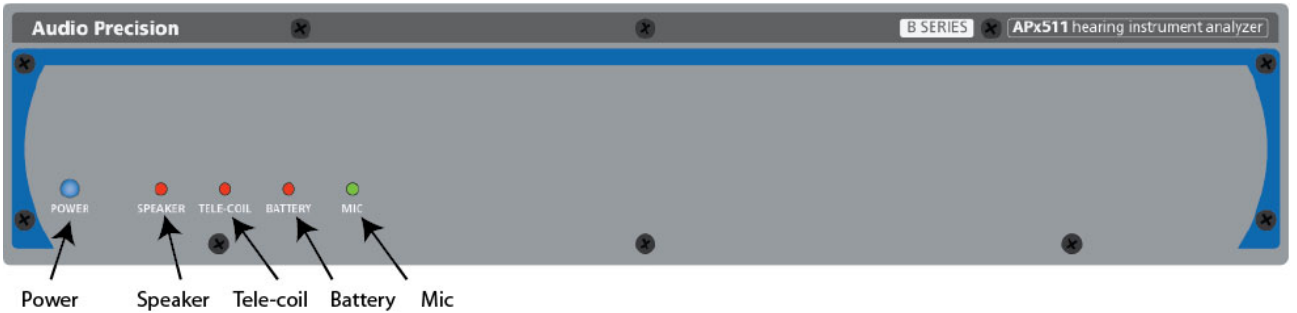

vided, with programming samples in LabVIEW, VB.NET and C#, and a program to illustrate usage of the DLL. See page page 64.

Front Panel Indicators

There are 5 LED indicators on the B Series APx511 front panel. From left to right, these are:

POWER

This indicator is lit when mains power is applied.

SPEAKER

This indicator is lit when the Speaker output is selected.

TELE-COIL

This indicator is lit when the Telecoil output is selected.

BATTERY

This indicator is lit when the battery reference voltage is on.

MIC

This indicator is lit when power is applied to the microphone input.

Rear Panel Connections

All connections to and from the B Series APx511 are provided on the rear panel. From left to right these are:

Power Input Module

The mains switch, the mains power input and mains line fusing are provided in the module. See the Installation chapter earlier in this booklet for detailed information.

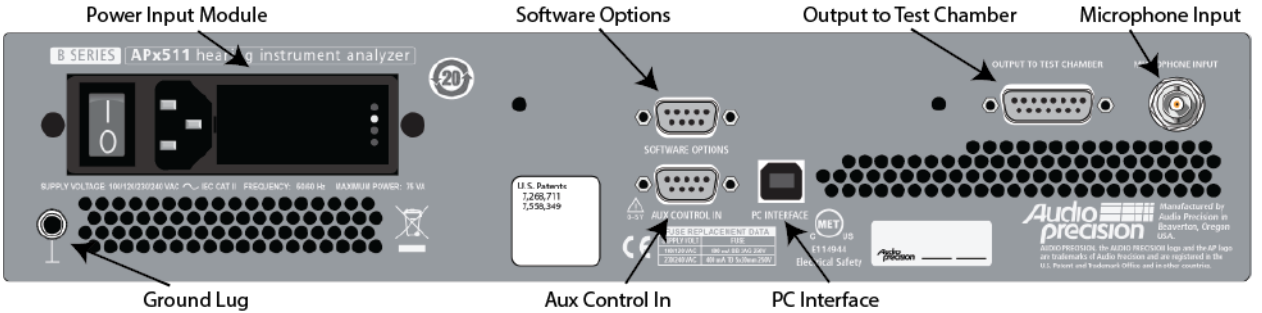

Ground connection

This ground lug provides a convenient point to bond the chassis and technical ground of the APx511 to other equipment as part of a test setup.

Software Options

The APx511 is provided with all the software features and measurements required for hearing instrument testing. If you also require PESQ or POLQA testing, optional software keys can be purchased. The software keys are connected at the Software Options connector.

Aux Control In

Aux Control (sometimes referred to as GPIO) provides the capability to communicate with external devices by transmitting and receiving control commands. The APx511 supports Aux Control Input only.

Aux Control In is a general-purpose 8-bit digital port, available on a 9-pin D-Sub connector. Pin 9 is the common (ground) connection; pins 1–8 are numbered to correspond with the Aux Control bits 1–8.

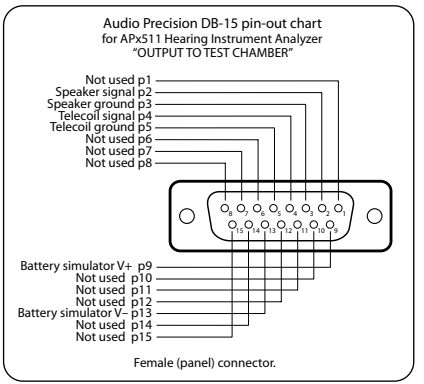

Aux Control In commands can be read in the APx500 software, or can be used to trigger actions in an APx500 sequence. Applications include input of operator controls (such as a foot switch) and reading of device states.

PC Interface

Use this connector to connect the B Series APx511 to a USB port on the PC running APx500.

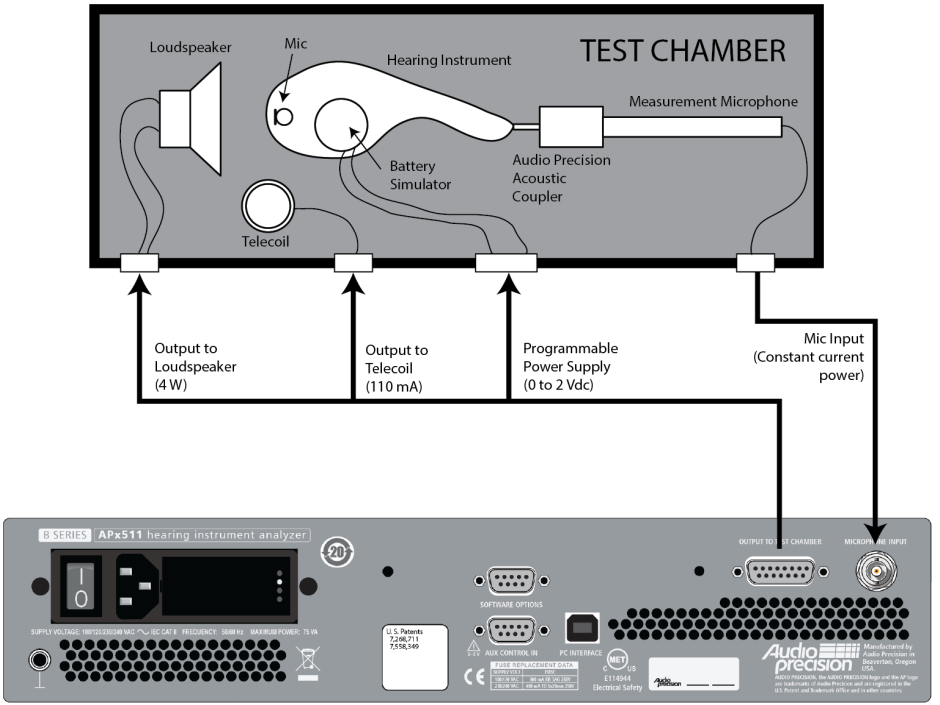

Output to Test Chamber

This connector provides connectivity to elements in the test chamber, as shown in the diagram on the opposite page, and are detailed in the connector pin-out diagram shown here.

Microphone Input

Connect the measurement microphone to this BNC connector. The APx511 is designed to be used with a prepolarized measurement microphone that uses constant current power (CCP).A 24 Vdc, 4 mA constant current power source to power the microphone can be switched ON or OFF in software.

Basic Test configuration

Hearing instrument testing is typically performed in an acoustically isolated test chamber, which is fitted with a loudspeaker, a telecoil, a battery simulator and a measurement microphone with a 2 cc acoustic coupler.

The APx511 is shipped with either a DB-15 to DB-15 cable, or a DB-15 breakout cable, selected at time of purchase. Use this cable to connect the elements in your test chamber to the APx511 as shown in this diagram. The microphone cable shown here is provided with the measurement microphone, when purchased as an option from Audio Precision.

Accessories

Measurement microphone, dummy mic, HA-1 and HA-2 couplers.

Audio Precision offers these accessories for the APx511:

- Measurement Microphone, 0.5 in. diameter.
- Measurement Microphone, 14 mm diameter.
- Microphone coupler, 2 cc, HA-1-05, 0.5 in.
- Microphone coupler, 2 cc, HA-2-05, 0.5 in, with BTE tubes.
- Microphone coupler, 2 cc, HA-1-14, 14 mm

- Microphone coupler, 2 cc, HA-2-14, 14 mm, with BTE tubes.
- Dummy mic, 0.5 in diameter
- Dummy mic, 14 mm diameter
- Microphone calibrator, 0.5 in fitting
- Calibrator adapter, 0.5 in. to 14 mm
- APx511 Self test kit

G.R.A.S. Microphone Calibrator

Please contact your representative or Audio Precision for more information.

APxHia

We have created a program called APxHia to illustrate the hearing instrument testing functions available in the .NET function library.

The program provides tools for microphone calibration and chamber leveling and other common tasks. It also runs a series of tests satisfying the two defining standards for hearing instrument testing.

Installing APxHia

APxHia can be downloaded from the Audio Precision Web site at audioprecision.com. Go to Audio Analyzers > APx511 Audio Analyzer > and choose Downloads. Go to Latest Software, and choose APxHia (Hearing Instrument Analyzer) x.x. An archive called APX_HIA_x-x.zip will be downloaded to your PC. Extract the archived files.
Run HearingInstrumentAnalyzerSetup.exe to install APxHia on your system.

Note that APxHia is provided for illustrative purposes only. For production testing a user-created program in C#.NET, VB.NET or LabVIEW should be created to address the API. See page page 64.
The graphs displayed in APxHia are images.

To access the graph data, go to the corresponding graph in the APx500 user interface.

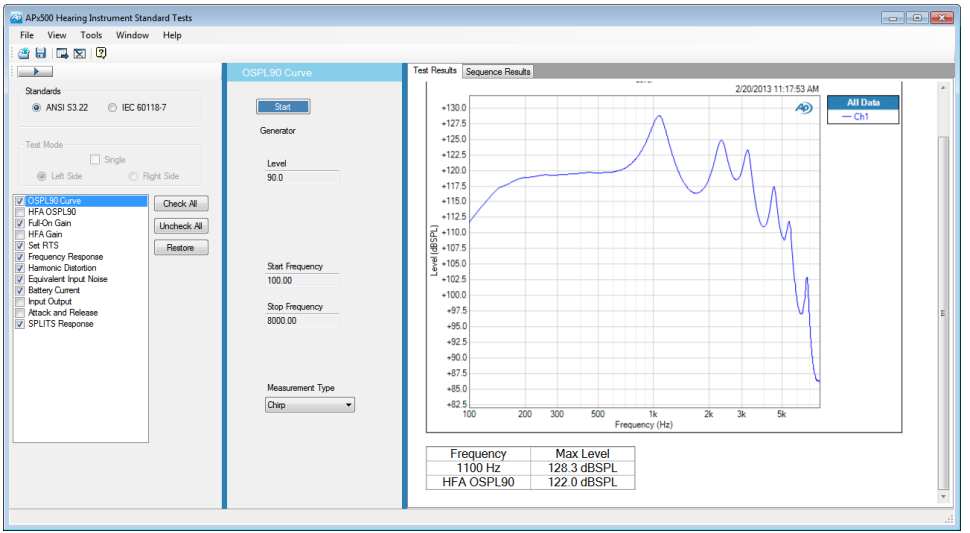

Running APxHia

After installing APxHia, choose **APxHia** from the **Windows Start menu** under **Audio Precision > APx500 x.x > Hearing Instrument Analyzer**.

When APxHia first launches, it also launches APx500 (in the background, not visible) and opens an APx project file. If APxHia has been run on this system before, previous settings are read and applied.

From the APxHia **View** menu, choose **APx500** to make APx500 visible. If you are familiarizing yourself with the APx511, it can be instructive to watch the APx500 displays while the testing progresses.

You can also choose to turn the APx signal monitors ON or OFF from the **View** menu. The signal monitors consume considerable PC resources, and you may find that your system is more responsive with the monitors off.

Calibrating the microphone

A first step is to set microphone calibration for the system. Go to **Tools > Microphone** to open the **Microphone Calibration** dialog. If the microphone has been previously calibrated with this system, the calibration date will be shown.

Using a Calibrator

APxHia provides two methods of obtaining calibration references. The preferred method is to use a third-party microphone calibrator device. Choose **Use Calibrator** form the **Reference** menu.

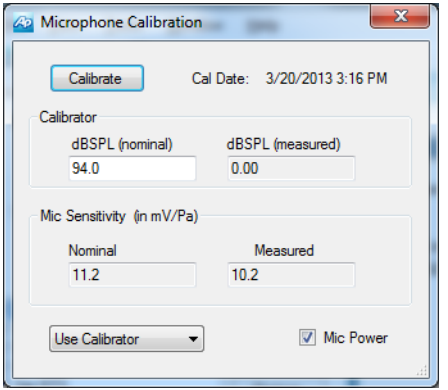

Microphone calibrator devices typically provide acoustic output levels of either 94 dBSPL or 114 dBSPL. Enter the calibrator output level in the **dBSPL (nominal)** field.

Check the **Mic Power** checkbox to apply power to the microphone. With APx visible, you can verify connections and power by tapping the microphone while watching the Level display in APx500.

Fit the microphone to the calibrator and turn the calibrator ON. In APxHia, Click **Calibrate**.

The program will measure the microphone output and set **Mic Sensitivity (measured)** value as required to calibrate the microphone.

Bypassing acoustic calibration

If you do not have a microphone calibrator, you can bypass acoustic calibration and instead enter the microphone sensitivity from the microphone specification sheet.

Leveling the test chamber

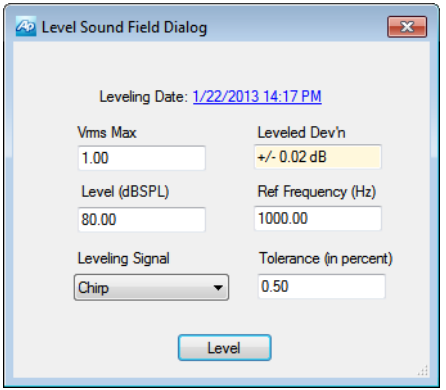

This tool will set chamber acoustic output to a calibrated level, and equalize the analyzer output to compensate for loudspeaker response.

If no leveling data is on file for this system, the **Leveling Date** field will read "No Leveling Data."

Leveling uses the regulation function in APx.

Put the microphone on the chamber test point spot. Fit the dummy mic to the coupler to maintain a constant acoustic space. Close and seal the chamber.

Click **Level**. The program finds the generator level required to achieve the target level and sweeps the chamber at that level. A compensation curve is created and applied to the generator output. The chamber is swept again with leveling compensation, and the maximum deviation from flat response at the reference frequency is shown in the Leveled Deviation field.

Preparing the DUT

For testing purposes, hearing instruments are considered to be one of two types: "behind the ear" (BTE), which uses a short acoustic tube to route the instrument output to the ear canal, and "in the ear" (ITE) which outputs sound directly into the ear canal.

Fit the appropriate microphone coupler to the acoustic output of your device under test (DUT). Fit the measurement microphone into the coupler.

Powering the DUT

For testing purposes, the internal battery is replaced with a battery simulator (or *pill*). Fit the battery simulator into the DUT and connect it to the battery adapter jack within the chamber.

Testing the Acoustic input

The hearing instrument is typically tested in an acoustic chamber, where a loudspeaker stimulates the instru-

ment's receiver (internal microphone). Set the DUT in the chamber's optimal acoustic test point (the "sweet spot"), and attach the microphone coupler and measurement microphone.

Set the DUT's program switch to acoustic mode.

Testing the Magnetic input

The acoustic chamber is also fitted with a telephone magnetic field simulator (TMFS, or telecoil) to induce a signal into the DUT's telecoil input. The optimal placement of the DUT for magnetic coupling must be discovered by trial, as described in the procedure below.

For telecoil testing, set the DUT's program switch to telecoil mode.

Running the standard tests

Place the DUT (with the battery simulator installed), the measurement microphone/coupler combination and the dummy mic in the chamber.

Follow the prompts in the measurements to set the DUT volume control to the correct level.

ANSI S3.22 / IEC60118-7

Hearing instrument testing is defined in two standards: ANSI S3.22 from the American National Standards Institute, based in Washington, D.C., and IEC60118-7, from the International Electrotechnical Commission based in Geneva, Switzerland.

The two standards are largely the same, with only a few minor differences in methods, values and nomenclature. Refer to the standard of interest for an explanation of terms and procedures.

APxHia provides a series of measurements for each standard, selectable by the Standards buttons.

Measurements for ANSI S3.22

These ANSI S3.22 measurements are supported:

OSPL90 curve

OSPL90 Curve measures coupler output sound pressure level (OSPL) as a function of frequency, for a 90 dB input SPL.

HFA OSPL90

HFA OSPL90 displays the high frequency average (average SPL at 1 kHz, 1.6 kHz and 2.5 kHz) for a 90 dB input SPL.

Full-On Gain

Full-On Gain (FOG) displays gain for an input of 60 dBSPL when the gain of the hearing instrument is at its full-on position.

HFA Gain

HFA Gain displays the HFA gain for an input of 60 dBSPL when the gain of the hearing instrument is at its full-on position.

Set RTS

An interactive dialog to set the Reference Test Setting, using the volume control on the DUT.

Frequency Response

Coupler SPL as a function of frequency for a 60 dB input SPL, with gain control at RTS.

Harmonic Distortion

Ratio of sum of the powers of all the harmonics to the power of the fundamental at various levels and frequencies.

Equivalent Input Noise

SPL of an external noise source at the input that would result in the same coupler SPL as that caused by all the internal noise sources in the hearing aid.

Battery Current

Electrical current drawn from the battery when the input SPL is 65 dB at 1000 Hz and the gain control is at RTS.

Input Output

For hearing aids with AGC, the coupler SPL as a function of the input SPL, at one or more of 250, 500, 1000, 2000, 4000 Hz, with the gain control at RTS

Attack and Release

Attack: For hearing aids with AGC, the time between an abrupt change from 55 to 90 dB input SPL and the time when the coupler SPL has stabilized to within 3 dB of the steady value for a 90 dB input SPL, at one or more of 250, 500, 1000, 2000, 4000 Hz, with the gain control at RTS.

Release: For hearing aids with AGC, the time between an abrupt change from 90 to 55 dB input SPL and the time when the coupler SPL has stabilized to within 4 dB of the steady value for a 55 dB input SPL, at one or more of 250, 500, 1000, 2000, 4000 Hz, with the gain control at RTS.

SPLITS Response

For hearing aids with an inductive input coil (T-coil), the coupler SPL as a function of frequency when the hearing instrument, with gain control at RTS, is oriented for maximum output on a telephone magnetic field simulator (TMFS).

IEC60118-7

These IEC60118-7 measurements are supported:

OSPL90 curve

OSPL90 Curve measures coupler output sound pressure level (OSPL) as a function of frequency, for a 90 dB input SPL.

HFA OSPL90

HFA OSPL90 displays the high frequency average (average SPL at 1 kHz, 1.6 kHz and 2.5 kHz) for a 90 dB input SPL.

Full-On Gain

Full-On Gain (FOG) displays gain for an input of 50 dBSPL when the gain of the hearing instrument is at its full-on position.

HFA Gain

HFA Gain displays the HFA FOG for an input of 50 dBSPL when the gain of the hearing instrument is at its full-on position.

Set RTS

An interactive dialog to set the Reference Test Setting, using the volume control on the DUT.

Frequency Response

Coupler SPL as a function of frequency for a 60 dB input SPL, with gain control at RTS.

Battery Current

Electrical current drawn from the battery when the input SPL is 65 dB at 1000 Hz and the gain control is at RTS.

Equivalent Input Noise

SPL of an external noise source at the input that would result in the same coupler SPL as that caused by all the internal noise sources in the hearing instruement.

Harmonic Distortion

Ratio of sum of the powers of all the harmonics to the power of the fundamental at various levels and frequencies.

Input Output

For hearing aids with AGC, the coupler SPL as a function of the input SPL, at one or more of 250, 500, 1000, 2000, 4000 Hz, with the gain control at RTS.

Attack and Release

Attack: For hearing aids with AGC, the time between an abrupt change from 55 to 90 dB input SPL and the time when the coupler SPL has stabilized to within 3 dB of the steady value for a 90-dB input SPL, at one or more of 250, 500, 1000, 2000, 4000 Hz, with the gain control at RTS.

Release: For hearing aids with AGC, the time between an abrupt change from 90 to 55 dB input SPL and the time when the coupler SPL has stabilized to within 4 dB of the steady value for a 55 dB input SPL, at one or more of 250, 500, 1000, 2000, 4000 Hz, with the gain control at RTS.

ETLS

For hearing aids with an inductive input coil (T-coil), first find HFA-SPLI, the high frequency average SPL in a magnetic field. Subtract from this (RTG+60 dB) to find ETLS, the equivalent test loop sensitivity.

HFA MASL

Orient the hearing instrument in the magnetic field for maximum pick-up sensitivity, measure HFA output SPL and calculate MASL (magneto-acoustical sensitivity level).

Using the APxHITest API

Introduction

The APxHiTest DLL (HiTest.dll) is a class library used to aid in the development of user applications that will be used to test hearing instruments with APx500 and the APx511. Based on .NET, it can be used with C#, VB or LabVIEW.

A detailed Help file (HiTest_API_PRG.chm) for the API is provided via a shortcut in the Windows Start menu. Sample files are listed on page page 71. The DLL and the Help file are included in the APxHia download.

A Quick Tour of the DLL

The APxHITest DLL provides functions for making basic measurements that can satisfy ANSI or IEC requirements. It also provides for saving or restoring settings from file. The DLL provides all required communications with the APx API.

APx500 software must be installed and of the correct version.

The DLL and support files are installed with the APx program files, in a subfolder named HearingInstrumentTest.

A Layer View

The interaction of the different components of the system is based on layers of software on top of the B Series APx511 Analyzer, as shown in the diagram below.

The first layer above the analyzer is the APx500 API. It provides a functional interface for access to the instrument and all of its measurement capabilities.

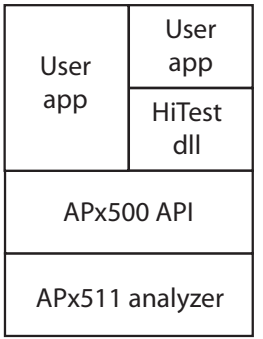

In the diagram, the second layer above the APx511 analyzer contains a user created application and the APxHiTest DLL. The HiTest DLL is designed to provide a simplified interface to the instrument that is tailored for hearing instrument testing.

The top layer in the diagram shows a user-created application (User App) that is designed for testing hearing instruments. This top level application can access the APx511 analyzer completely through the HiTest DLL without any reference to the APx500 API. The APxHia application installed from the APxHia download is an example of such an application.

The user created application shown in the upper left corner of the diagram can access the APx511 analyzer through the APx500 API or through the HiTest DLL, or both. A sample use case for this would be an application to test hearing instruments that needs some of the more advanced features available in the APx500 API as well as the standard measurements available in the HiTest DLL. In this case, the application would reference the APx500 API as well as the HiTest DLL

Initialization

The first step in any application is to create an instance of the APxHiTest object. This is done in C# or VB by declaration and assignment.

C#.NET

```
Using AudioPrecision.HiTest;
Private APxHiTest apxHiTest;
// Create a new instance
apxHiTest = new APxHiTes();
```

VB.NET

```
Imports AudioPrecision.HiTest
Private apxHiTest As APxHiTest
' Create a new instance
apxHiTest = New APxHiTest()
```

The module will require access to the DLL, which should be referenced in the project. Once referenced, then a using statement will bring in the functionality of the dll. Within a class constructor, the call to declare an instance the APxHiTest can be made.

Once an object is created, it must be initialized

C#.NET

```
var r = apxHiTest.Initialize();
If (!r)
   // throw an initialization error or display
  // a messagebox.
```

VB.NET

```
Dim r as Boolean
' Initialize it
R = apxHiTest.Initialize()
If (r == False)
  // Initialize failed
```

The Initialize function will load the APx project file that is specific to the Hearing Instrument DLL. It is found in the SupportFiles folder of the installed directory for the DLL.

Configuration

The DLL provides file handling for the storing and retrieval of microphone calibration and speaker leveling. These files reside in a default directory. The location can be assigned for opening different files.

C#.NET

```
apxHiTest.ConfigurationFullPath = "myPath";

apxHiTest.RestoreConfiguration();
```

VB.NET

```
' Set the path to the target configuration
apxHiTest.ConfigurationFullPath = "myPath"
' Load the configuration
apxHiTest.RestoreConfiguration()
```

By setting ConfigurationFullPath, the application can bring in settings from different locations or save settings to folders other than the default folder.

Calibration

Two main areas are the focus of calibration. The microphone and must be calibrated and the speaker must be leveled for proper measurements to be made.

Microphone Calibration

The microphone may be calibrated with the use of a standardized calibrator that provides a known level, or entering the specifications from a microphone data sheet.

• Calibration Technique	• APXHITest Function Name
• Using a calibrator	• CalibrateMic (calibrator level, acceptable tolerance)
• Using a data sheet	• CalibrateMic (Signal path, spec in mV/Pa)
• Measuring applied level	• MeasureCalSPL (signal path, MeasSplType.ReferenceLevels)

The second CalibrateMic function (above) should be used to set the mic cal value for each signal path in the project, insuring that all signal paths are properly set up for the microphone.

Two methods provide status of the calibration by indicating if a calibration has been performed (by calling IsMicCalibrated), and the time of the last attempt (by calling MicCalibrationTimestamp). The time of the last calibration will reflect when it was last performed, regardless of its success.

Speaker Leveling

The system must determine what levels are required to generate a flat response through the speaker. This is accomplished by performing the leveling. It applies the full range of frequencies to the speaker and the microphone will capture the level at that frequency. The resultant table of frequencies and levels can be applied to the APx, so that future measurements using the speaker will have a flat response curve.

There is one function for performing this, called LevelAcousticPath. It takes several arguments. As a result of a successful leveling, the instrument will be loaded with the proper equalization table for each measurement used.

Calibration Persistence

Each time the APxHiTest is initialized, it will read in the calibration and leveling data from previous sessions. If there has been a change in either the microphone or speaker parameters, the data will be saved at the close of the
APxHiTest.

Measurements

The supplied functions for performing measurements are written as such to allow a generalized use, where levels can be provided based on the needs of the specific test being performed.

For instance, to measure OSPL90, a call to MeasureFrequencyResponseLevel is made.

C#.NET

```
double level = 90.0;
SignalType sweep =
SignalType.FrequencyResponse;
SignalPath path = SignalPath.Acoustic;
APXHiTest.XYarrayPair results = apxHiTest.
MeasureFrequencyResponseLevel(level, path,
sweep);
```

VB.NET

```
' Declare a variable to hold the results
Dim ospl90 As APxHiTest.XYarrayPair
Dim path As APxHiTest.SignalPath
Dim signal As APxHiTest.SignalType
path = APxHiTest.SignalPath.Acoustic
signal = APxHiTest.SignalType.FrequencyResponse
' Call the measurement function on the Acoustic
path using Frequency Response
ospl90 =
apxHiTest.MeasureFrequencyResponseLevel(90.0,
path, signal)
```

The value returned from the call will be a structure containing two arrays, the X array is the list of frequencies, and the Y array is the list of levels found at each frequency. To complete the measurement, scan through the X array to find the index of the three HFA frequencies of 1.0K, 1.6K and 2.5K, and find the matching levels. Perform an average of the three levels to provide OSPL90.

Instrument Parameters

There are several functions that support the APx500 directly. With these functions, the version or serial number can be queried. Also the APx500 UI can be made visible or hidden. The signal monitors can be turned on or off.

C#.NET

```
// Hide the APx
apxHiTest.Visible = false;
```

VB.NET

```
' Make APx visible
apxHiTest.Visible = False
```

Closing

At the end of the application, before it exits, a call to close the DLL should be made. If the Close function is called with True as its argument, then the APx500 will shut down as well..

C#.NET

```
// Close the HiTest
apxHiTest.Close();
```

VB.NET

```
' Close the HiTest
apxhiTest.Close()
```

API Help File

Refer to the HiTest_API_PRG.chm help file included in the APxHia download and available via a shortcut in the Windows Start menu.

Measurement Overview

To accomplish measurements that are in line with the ANSI standards, refer to the following table for guidelines of functions to call and what parameters to supply.

ANSI [IEC] Test Name	ANSI [IEC] Level	HI Dut	APxHiTest Measurement Name
• OSPL90	• 90 dBSPL	• At FOG	• MeasureFrequencyResponseLevel
• HFA OSPL90	• 90 dBSPL	• At FOG	• HfaMeasurement with HfaResultsType.HfaOSPL
• Full On Gain	• 60 dBSPL [50]	• At FOG	• MeasureFrequencyResponseLevel
• HFA Gain	• 60 dBSPL [50]	• At FOG	• HfaMeasurement with HfaResultsType.HfaGain
• Set RTS	• 60 dBSPL	• At FOG	• HfaMeasurement with HfaResultsType.HfaGain
• Frequency Response	• 60 dBSPL	• At RTS	• MeasureFrequencyResponseLevel
• Harmonic Distortion	• 70 @ 500Hz, 70 @ 800 Hz, 60 @ 1.6kHz	• At RTS	• MeasureTHD
• Equivalent Input Noise	• 50 dBSPL	• At RTS	• EinMeasurement
• Battery Current	• 65 @ 10kHz	• At RTS	• MeasureBatteryCurrent
• SPLITS [ETLS]	• 31.6 mA/m	• At RTS and Telecoil	• MeasureTelecoilSensitivity, and MeasureFrequencyResponseLevel for plot data
• HFA MASL	• 10 mA/m	• At FOG and Telecoil	• MeasureTelecoilSensitivity
• Input / Output	• 50 to 90 dBSPL in 5 dB steps	• At RTS and Acoustic	• InputOutputResponse
• Attack / Release	• 50 and 90 dBSPL	• At RTS and Acoustic	• AttackAndRelease

Some measurements provide data as single values. Some metrics must be derived from the measurement results.

APxHiTest Graphics

Two measurement functions support capturing the plot screen as a bitmap that can be displayed by the applica-

tion. They are MeasureFrequencyResponse and MeasureInputOutput. They make use of optional arguments beyond the required arguments. The default is to skip the screen capture. If a string file name is supplied, then the image will be stored in the named file with the dimensions of 640 by 480. The call can also include the x and y dimensions of the desired image size. The file name should be a fully qualified name of path and file name.

APxHiTest SignalType

Several of the measurements allow for a choice in the underlying test method. The caller can provide the selection. These are basically Chirp (or Frequency Response), Stepped Frequency Sweep, or Composite (Multitone).

Programming samples

We provide a number of programming samples to illustrate operating the APx511 in a production environment using the API. These files are typically installed in the user area, e.g. ~\User Docs\APx500 x.x|HI Analyzer

Sample Files

The content of the C# and VB solutions and files and the LabVIEW VIs is similar, providing the same capabilities.

C#.NET solutions and files

These are typically installed in ~\User Docs\APx500 x.x |HI Analyzer\Examples\CSharp. Specific documentation can be found in the interactive help available while running the solution in Visual Studio, or in the Help file HiTest_API_PRG.chm.

VB.NET solutions and files

These are typically installed in ~\User Docs\APx500 x.x|HI Analyzer\Examples\VBNET. Specific documentation can be found in the interactive help available while running the solution in Visual Studio, or in the Help file HiTest_API_PRG.chm.

LabVIEW VIs

These are typically installed in ~\User Docs\APx500 x.x|HI Analyzer\Examples\LabVIEW. Specific documentation can be found within the LabVIEW VIs.

Running Self Test

APx511 Self Test Kit (Self Test Fixture, cable and terminator)

Audio Precision provides a group of “Self Test” APx projects, under control of a program called SelfTest.exe. Download Self Test from audioprecision.com. Be sure to select the Self Test for the version of APx500 you are currently running. Instructions are in the ReadMe.txt file included in the Self Test zip file.

For the APx511, a special fixture is required to connect the APx511 outputs to its input, and to provide proper loading and termination. This fixture with a cable and a terminator are in the SLFT-KIT, available from Audio Precision.

Plug the DB-15 connector on the self test fixture directly into the DB-15 connector on the APx511 rear panel. Connect the BNC cable and the 75 Ω terminator as directed by prompts in SelfTest.exe.

An Axiometrix Solutions Brand

Audio Precision, Inc.
9290 SW Nimbus Ave.
Beaverton, Oregon 97008

800-231-7350

8211.0363